Motori Orbitali

Serie
OML/OMM/OMP/OMR/OMH
OMEW/OMS/OMT/OMV/TMT

SAMER®

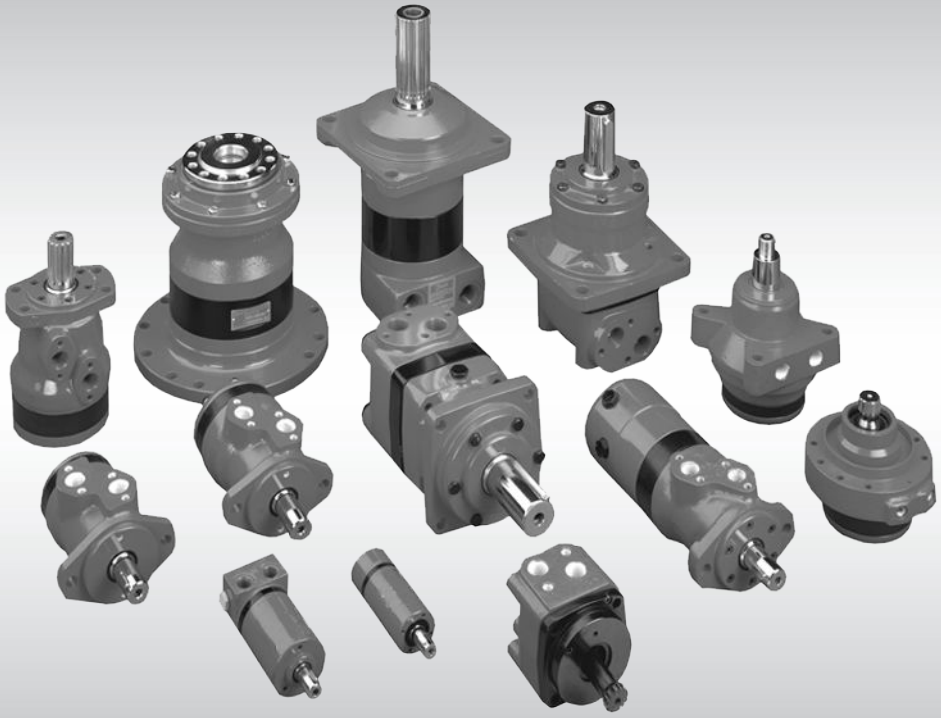

Una vasta gamma di motori

Caratteristiche e campi di applicazione dei Motori Orbitali

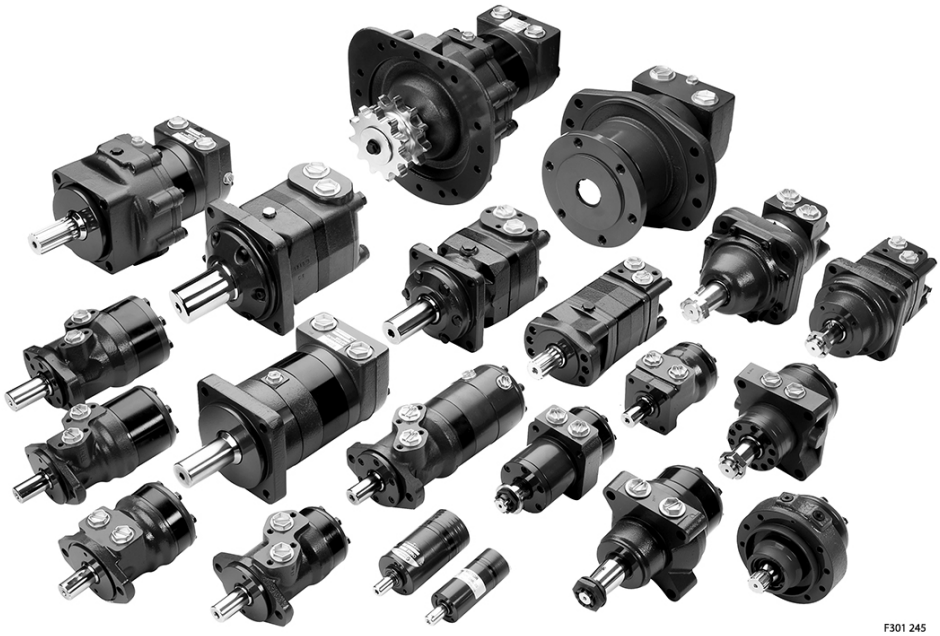

Danfoss è leader mondiale nella produzione di motori orbitali a bassa velocità con coppia elevata.
SAMER è in grado di offrire oltre 3.000 motori orbitali diversi, classificati in tipi,cilindrate, varianti e dimensioni (comprese le diverse versioni di alberi).

I motori variano di dimensioni (cilindrata nominale) da 8 cm³ [0,50 in³] a 800 cm³ [48,9 in³] per giro. Le velocità vanno fino a circa 2.500 min-1 (rpm) per il tipo più piccolo e fino a circa 600 min-1 (rpm) per il tipo più grande.

Le coppie operative massime variano da 13 N • m [115 lbf • in] a 2.700 N • m [24.000 lbf • in] (picco) e le potenze massime vanno da 2,0 kW [2,7 CV] a 70 kW [95 CV].

Caratteristiche caratteristiche dei motori orbitali Danfoss

• Funzionamento regolare su tutta la gamma di velocità

• Coppia di funzionamento costante a tutte lecondizioni di velocità

• Elevata coppia di spunto

• Alta pressione di ritorno senza l’uso della linea di scarico (tenuta dell’albero ad alta pressione)

•Alta efficienza

• Lunga durata in condizioni operative estreme

• Design robusto e compatto

• Elevata capacità di carico radiale e assiale

• Per applicazioni in sistemi idraulici sia a circuito aperto che chiuso

Caratteristiche tecniche del motore orbitale Danfoss

Caratteristiche Tecniche

Technical data for OML with 16 mm and 5/8 in cylindrical shaft

Type			OML	OML	OML	OML
Motor Size			**8**	**12.5**	**20**	**32**
Geometric displacement	cm^3 [in^3]		8.0 [0.49]	12.5 [0.77]	20.0 [1.22]	32.0 [1.96]
Max. speed	min^{-1} [rpm]	cont.	2000	1280	800	500
		int.[1)]	2500	1600	1000	625
Max. torque	Nm [lbf•in]	cont.	7 [60]	11 [100]	18 [160]	29 [260]
		int.[1)]	13 [120]	20 [180]	32 [280]	51 [450]
Max. output	kW [hp]	cont.	1.1 [1.5]	1.1 [1.5]	1.1 [1.5]	1.1 [1.5]
		int.[1)]	2.0 [2.7]	2.0 [2.7]	2.0 [2.7]	2.0 [2.7]

Caratteristiche Tecniche

Technical data for OMM with 16 mm and 5/8 in cylindrical shaft

Type			OMM	OMM	OMM	OMM	OMM	OMM
Motor size			**8**	**12.5**	**20**	**32**	**40**	**50**
Geometric displacement	cm^3 [in^3]		8.2 [0.50]	12.5 [0.77]	19.9 [1.22]	31.6 [1.93]	39.8 [2.43]	50 [3.08]
Max. speed	min^{-1}	cont.	1950	1550	1000	630	500	400
	[rpm]	int.[1)]	2450	1940	1250	800	630	500
Max. torque	Nm [lbf•in]	cont.	11 [95]	16 [140]	25 [220]	40 [350]	45 [400]	46 [410]
		int.[1)]	15 [135]	23 [200]	35 [310]	57 [500]	70 [620]	88 [780]
Max output	kW [hp]	cont.	1.8 [2.4]	2.4 [3.2]	2.4 [3.2]	2.4 [3.2]	2.2 [3.0]	1.8 [2.4]
		int.[1)]	2.6 [3.5]	3.2 [4.3]	3.2 [4.3]	3.2 [4.3]	3.2 [4.3]	3.2 [4.3]

1) Funzionamento intermittente: possono verificarsi valori ammessi per max. 10% di ogni minuto.

2) Carico di picco: i valori consentiti possono verificarsi per max. 1% di ogni minuto.

3) max. caduta di pressione in applicazioni con un grande momento di inerzia e frequenti arresti o inversioni.

4) Il funzionamento a velocità inferiore può essere leggermente meno regolare.

Caratteristiche Tecniche

Technical data for OMP with 25 mm and 1 in cylindrical shaft
Technical data for OMP with 1 in splined and 28.5 mm tapered shaft
Technical data for OMP with 32 mm cylindrical shaft

Type			OMP	OMP	OMP	OMP	OMP	OMP	OMP
Motor size			**25**	**32**	**40**	**50**	**60**	**80**	**100**
Geometric displacement	cm^3 [inch]		25.0 [1.53]	32.0 [1.96]	40.0 [2.45]	48.6 [2.97]	59.1 [3.61]	77.8 [4.76]	97.3 [5.95]
Max. speed	min^{-1}	cont.	1600	1560	1500	1230	1000	770	615
	[rpm]	int.[1)]	1800	1720	1750	1540	1250	960	770
Max. torque	N•m [lbf•in]	cont.	33 [290]	43 [380]	52 [460]	93 [820]	115 [1020]	150 [1330]	190 [1680]
		int.[1)]	47 [420]	61 [540]	74 [660]	120 [1060]	140 [1240]	190 [1680]	230 [2040]
		peak[2)]	67 [590]	86 [760]	107 [950]	140 [1240]	180 [1590]	220 [1950]	270 [2390]
Max. output	kW [hp]	cont.	4.5 [6.0	5.8 [7.8]	7.0 [9.4]	10.0 [13.4]	10.0 [13.4]	10.0 [13.4]	11.0 [14.8]
		int.[1)]	6.1 [8.2]	7.8 [10.5]	10.6 [14.2]	12.0 [16.1]	12.0 [16.1]	12.0 [16.1]	13.0 [17.4]

Type			OMP	OMP	OMP	OMP	OMP	OMP	OMP
Motor size			**110**	**125**	**160**	**200**	**250**	**315**	**400**
Geometric displacement	cm^3 [inch]		112.5 [6.87]	125.0 [7.65]	155.7 [9.53]	194.6 [11.91]	242.3 [14.83]	306.1 [18.73]	389.2 [23.82]
Max. speed	min^{-1}	cont.	535	480	385	310	250	195	155
	[rpm]	int[1)]	670	600	480	385	310	245	190
Max. torque	N•m [lbf•in]	cont.	215 [1900]	240 [2120]	300 [2660]	300 [2660]	300 [2660]	300 [2660]	300 [2660]
		int.[1)]	260 [2300]	290 [2570]	370 [3280]	380 [3360]	410 [3630]	390 [3450]	420 [3720]
		peak[2)]	320 [2830]	370 [3280]	430 [3810]	540 [4780]	550 [4870]	600 [5310]	600 [5310]
Max. output	kW [hp]	cont.	10 [13.4]	10 [13.4]	10 [13.4]	8.0 [10.7]	6.0 [8.1]	5.0 [6.7]	4.0 [5.4]
		int.[1)]	12.0 [16.1]	12.0 [16.1]	12.0 [16.1]	11.0 [14.8]	9.0 [12.1]	7.0 [9.4]	6.0 [8.1]

1) Funzionamento intermittente: possono verificarsi valori ammessi per max. 10% di ogni minuto.

2) Carico di picco: i valori consentiti possono verificarsi per max. 1% di ogni minuto.

OMR Orbital Motors

Caratteristiche Tecniche

Technical data for OMR with 25 mm and 1 in cylindrical shaft
Technical data for OMR with 1 in splined and 28.5 mm tapered shaft
Technical data for OMR with 32 mm , 1 ¼ in cylindrical shaft and 35 mm, 1 ¼ in tapered shaft

Type			**OMR**	**OMR**	**OMR**	**OMR**	**OMR**	**OMR**	**OMR**	**OMR**	**OMR**
Motor size			**50**	**80**	**100**	**125**	**160**	**200**	**250**	**315**	**375**
Geometric displacement	cm^3 [inch]		51.6 [3.16]	80.3 [4.91]	99.8 [6.11]	125.7 [7.69]	159.6 [9.77]	199.8 [12.23]	249.3 [15.26]	315.7 [19.32]	372.6 [22.80]
Max. speed	min^{-1}	cont.	775	750	600	475	375	300	240	190	160
	[rpm]	int.[1)]	970	940	750	600	470	375	300	240	200
Max. torque	N•m [lbf•in]	cont.	100 [890]	195 1730]	240 [2120]	300 [2660]	300 [2660]	300 [2660]	300 [2660]	300 [2660]	300 [2660]
		int.[1)]	130 [1150]	220 [1960]	280 [2480]	340 [3010]	390 [3450]	390 [3450]	380 [3360]	420 [3720]	430 [3810]
		peak [2)]	170 [1510]	270 [2390]	320 [2830]	370 [3280]	460 [4070]	560 [4960]	600 [5310]	610 [5400]	600 [5310]
Max. output	kW [hp]	cont.	7.0 [9.4]	12.5 [16.8]	13.0 [17.4]	12.5 [16.8]	10.0 [13.4]	8.0 [10.7]	6.0 [8.1]	5.0 [6.7]	4.0 [5.4]
		int.[1)]	8.5 [11.4]	15.0 [20.1]	15.0 [20.1]	14.5 [19.4]	12.5 [16.8]	10.0 [13.4]	8.0 [10.7]	6.5 [8.7	6.0 [8.1]

1) Funzionamento intermittente: possono verificarsi valori ammessi per max. 10% di ogni minuto.

2) Carico di picco: i valori consentiti possono verificarsi per max. 1% di ogni minuto.

OMH Orbital Motors

Caratteristiche Tecniche

Technical data for OMH with 1 in SAE 6 B splined shaft
Technical data for OMH with 32 mm and 1 1/4 in cylindrical shaft
Technical data for OMH with 35 mm cylindrical, 1 1/4 in splined and 35 mm tapered shaft

Type			**OMH**	**OMH**	**OMH**	**OMH**	**OMH**
Motor size			**200**	**250**	**315**	**400**	**500**
Geometric displacement	cm^3 [inch]		201.3 [12.32]	252.0 [15.42]	314.9 [19.27]	396.8 [24.28]	470.6 [28.80]
Max. speed	min^{-1}	cont.	370	295	235	185	155
	[rpm]	int.[1)]	445	350	285	225	190
Max. torque	N•m [lbf•in]	cont.	340 [3000]	340 [3000]	340 [3000]	340 [3000]	340 [3000]
		int.[1)]	510 [4500]	510 [4500]	540 [4800]	540 [4800]	520 [4600]
		peak[2)]	610 [5400]	610 [5400]	610 [5400]	610 [5400]	610 [5400]
Max. output	kW [hp]	cont.	11.2 [15.0]	7.5 [10.0]	5.2 [7.0]	4.8 [6.5]	3.7 [5.0]
		int.[1)]	17.2 [23.0]	11.9 [16.0]	9.7 [13.0]	8.2 [11.0]	6.0 [8.0]

1) Funzionamento intermittente: possono verificarsi valori ammessi per max. 10% di ogni minuto.

2) Carico di picco: i valori consentiti possono verificarsi per max. 1% di ogni minuto.

OMEW Standard and with Low Speed Option Orbital Motors

Caratteristiche Tecniche

Technical Data for OMEW with 35 mm and 1 1/4 in Tapered Shaft

Type			**OMEW**	**OMEW**	**OMEW**	**OMEW**	**OMEW**	**OMEW**	**OMEW**	**OMEW**
Motor Size			**100**	**125**	**160**	**200**	**250**	**315**	**345**	**400**
Geometric displacement	cm^3 [in^3]		99.8 [6.11]	124.1 [7.60]	155.4 [9.51]	198.2 [12.13]	248.1 [15.18]	310.1 [18.98]	341.8 [20.86]	390.7 [23.83]
Max speed	min^{-1} [rpm]	cont.	600	475	375	300	240	190	175	150
		int.[1)]	750	695	470	375	300	240	220	190
Max torque	N•m [lbf•in]	cont.	250 [2210]	320 [2830]	410 [3630]	400 [3540]	470 [4160]	550 [4868]	610 [5400]	700 [6195]
		int.[1)]	270 [2390]	340 [3010]	430 [3810]	570 [5045]	710 [6284]	850 [7523]	860 [7612]	870 [7700]
Max output	kW [hp]	cont.	12 [16.1]	12 [16.1]	12 [16.1]	11 [14.75]	10 [13.41]	9 [12.07]	9 [12.07]	9 [12.07]
		int.[1)]	15 [20.1]	15 [20.1]	15 [20.1]	16 [21.5]	16 [21.5]	15 [20.1]	14 [18.8]	12 [16.1]

1) Funzionamento intermittente: possono verificarsi valori ammessi per max. 10% di ogni minuto.
2) Carico di picco: i valori consentiti possono verificarsi per max. 1% di ogni minuto.

OMS Orbital Motors

Caratteristiche Tecniche

Technical data for OMS with Cylindrical 32 mm shaft
Technical data for OMS with 31 1/4 in cylindrical shaft
Technical data for OMS with Cylindrical 1 in shaft
Technical data for OMS with splined shaft

Type			**OMS OMSW OMSS**	**OMS OMSW OMSS**	**OMS OMSW OMSS**	**OMS OMSW OMSS**	**OMS OMSW OMSS**	**OMS OMSW OMSS**	**OMS OMSW OMSS**	**OMS OMSW OMSS**	**OMS OMSW OMSS**
Motor size			**80**	**100**	**125**	**160**	**200**	**250**	**315**	**400**	**500**
Geometric displacement	cm^3 [in^3]		80.5 [4.91]	100.0 [6.10]	125.7 [7.67]	159.7 [9.75]	200.0 [12.20]	250.0 [15.26]	314.9 [19.22]	393.0 [23.98]	488.0 [29.78]
Max. speed	min^{-1} [rpm]	cont.	810	750	600	470	375	300	240	190	155
		int[1)]	1000	900	720	560	450	360	285	230	185
Max. torque	Nm [lbf·in]	cont.	240 [2120]	305 [2700]	375 [3320]	490 [4340]	610 [5400]	720 [6370]	825 [7300]	865 [7660]	850 [7520]
		int.[1)]	310 [2740]	390 [3450]	490 [4340]	600 [5310]	720 [6370]	870 [7700]	1000 [8850]	990 [8760]	990 [8760]
Max. output	kW [hp]	cont.	15.5 [20.8]	18.0 [24.1]	18.0 [24.1]	16.5 [22.1]	16.5 [22.1]	14.5 [19.4]	15.0 [20.1]	11.0 [14.8]	9.0 [12.1]
		int.[1)]	19.5 [26.2]	22.5 [30.2]	22.5 [30.2]	23.0 [30.8]	22.0 [29.5]	18.0 [24.1]	17.0 [22.8]	12.5 [16.8]	10.5 [14.1]

1) Funzionamento intermittente: possono verificarsi valori ammessi per max. 10% di ogni minuto.
2) Carico di picco: i valori consentiti possono verificarsi per max. 1% di ogni minuto.

OMT Orbital Motors

Caratteristiche Tecniche

OMT, OMTW, OMTS, OMT FX OMT FL and OMT FH
Technical data for OMT with Cylindrical 40 mm shaft
Technical data for OMT with Cylindrical 1.5 in shaft
Technical data for OMT splined shaft

Type			**OMT OMTW OMTS OMT FX OMT FL OMT FH**	**OMT OMTW OMTS OMT FX OMT FL OMT FH**	**OMT OMTW OMTS OMT FX OMT FL OMT FH**	**OMT OMTW OMTS OMT FX OMT FL OMT FH**	**OMT OMTW OMTS OMT FX OMT FL OMT FH**	**OMT OMTW OMTS OMT FX OMT FL OMT FH**
Motor size			**160**	**200**	**250**	**315**	**400**	**500**
Geometric displacement	cm^3 [in^3]		161.1 [9.83]	201.4 [12.29]	251.8 [15.37]	326.3 [19.91]	410.9 [25.07]	523.6 [31.95]
Max. speed	min^{-1} [rpm]	cont.	625	625	500	380	305	240
		int[1)]	780	750	600	460	365	285
Max. torque	Nm [lbf·in]	cont.	470 [4160]	590 [5220]	730 [6460]	950 [8410]	1080 [9560]	1220 [10800]
		int.[1)]	560 [4960]	710 [6280]	880 [7790]	1140 [10090]	1260 [11150]	1370 [12130]
Max. output	kW [hp]	cont.	26.5 [35.5]	33.5 [44.9]	33.5 [44.9]	33.5 [44.9]	30.0 [40.2]	26.5 [35.5]
		int.[1)]	32.0 [42.9]	40.0 [53.6]	40.0 [53.6]	40.0 [53.6]	35.0 [46.9]	30.0 [40.2]

1) Funzionamento intermittente: possono verificarsi valori ammessi per max. 10% di ogni minuto.
2) Carico di picco: i valori consentiti possono verificarsi per max. 1% di ogni minuto.

OMV Orbital Motors

Caratteristiche Tecniche

OMV, OMVW and OMVS
Technical data for OMV with Cylindrical 50 mm shaft
Technical data for OMV with Cylindrical 2.25 in shaft for OMV with standard mounting flange and with mounting flange SAE-C

Type			**OMV OMVW OMVS**	**OMV OMVW OMVS**	**OMV OMVW OMVS**	**OMV OMVW OMVS**	**OMV OMVW OMVS**
Motor size			**315**	**400**	**500**	**630**	**800**
Geometric displacement	cm^3 [in^3]		314.5 [19.19]	400.9 [24.46]	499.6 [30.49]	629.1 [38.39]	801.8 [48.93]
Max. speed	min^{-1} [rpm]	cont.	510	500	400	315	250
		int[1)]	630	600	480	380	300
Max. torque	Nm [lbf·in]	cont.	920 [8140]	1180 [10440]	1460 [12920]	1660 [14690]	1880 [16640]
		int.[1)]	1110 [9820]	1410 [12480]	1760 [15580]	1940 [17170]	2110 [18680]
Max. output	kW [hp]	cont.	42.5 [57.0]	53.5 [71.7]	53.5 [71.7]	48.0 [64.4]	42.5 [57.0]
		int.[1)]	51.0 [68.4]	64.0 [85.8]	64.0 [85.8]	56.0 [75.1]	48.0 [64.4]

1) Funzionamento intermittente: possono verificarsi valori ammessi per max. 10% di ogni minuto.
2) Carico di picco: i valori consentiti possono verificarsi per max. 1% di ogni minuto.

Cratteristiche Tecniche

Technical data for TMT, TMTU, TMTW and TMT FL
Technical data for TMT with Cylindrical shaft Ø 40 mm
Technical data for TMT with splined shaft
Technical data for TMT with tapered shaft Ø 45 mm
Technical data for TMT withCylindrical shaft, Ø 1 1/2 inch

Type **Motor size**			**TMT** **250**	**TMT** **315**	**TMT** **400**	**TMT** **470**	**TMT** **500**	**TMT** **630**
Geometric displacement	cm^3		251.8 [15.37]	326.3 [19.91]	410.9 [25.07]	477.3 [29.13]	494.8 [30.19]	629.1 [38.39]
	[in^3]							
Maximum speed	min^{-1}	cont.	500	380	305	270	250	200
	[rpm]	int(1)	600	460	360	320	300	240
Maximum torque	N•m [lbf•in]	cont.	940 [8,320]	1,230 [10,890]	1,520 [13,450]	1,760 [15,580]	1,770 [15,670]	1,830 [16,200]
		int.(1)	1,290 [11,420]	1,660 [14,690]	2,120 [18,760]	2,420 [21,420]	2,240 [19,825]	2,290 [20,270]
		peak(2)	1,440 [12,745]	1,865 [16,500]	2,355 [20,845]	2,735 [24,210]	2,390 [21,150]	2,740 [24,250]
Maximum output	kW [hp]	cont.	35 [47]	35 [47]	37 [50]	37 [50]	35 [47]	27 [36]
		int.(1)	47 [63]	47 [63]	51 [68]	49 [66]	42 [56]	33 [44]

1) Funzionamento intermittente: possono verificarsi valori ammessi per max. 10% di ogni minuto.
2) Carico di picco: i valori consentiti possono verificarsi per max. 1% di ogni minuto.

Servizi della SAMER
-Progettazione sistemi con pompe e motori in circuito chiuso
-Vendita pompe e motori in circuito chiuso e di impianti in circuito aperto
-Installazione e collaudo pompe e motori in circuito chiuso ed aperto
-Riparazione pompe e motori in circuito chiuso ed aperto

SAMER *S.r.l.*
C.da Molino 58/C - Campofilone FM - 63828
Tel: +39 0734 340364 - 06 30818297 - Cell.+39 348 6937145
info@samer.company - www.samer.company